LBC SINMAG

Manufacturers of Bakery and Foodservice Equipment

Model LPC-19-E & LPC-31-E

ELECTRIC CONVEYOR OVEN
INSTALLATION, SERVICE & PARTS MANUAL

RETAIN THIS MANUAL FOR FUTURE REFERENCE

LBC BAKERY EQUIPMENT, INC.

6026 31st Ave NE
Marysville, WA 98271, USA
Phone: *888-RACKOVN (888-722-5686)*
Email: *service@lbcbakery.com*
Website: *www.lbcbakery.com*

REV E 10/2016

READ FIRST

READ, UNDERSTAND AND FOLLOW THE INSTRUCTIONS AND WARNINGS CONTAINED IN THIS MANUAL. IT IS THE RESPONSIBILITY OF THE OWNER/OPERATORS OF THIS APPLIANCE TO TRAIN, SUPERVISE AND AUTHORIZE ANY PERSON DESIGNATED AS AN OPERATOR. ALL OPERATORS MUST READ AND UNDERSTAND THIS MANUAL.

Your LBC Conveyor Oven was manufactured to rigid standards. The appliance has been tested and is listed by Intertek Testing Services (ETL Semko) and meets applicable safety and sanitation standards.

A. The **responsibility of the manufacturer** is to supply suitable, comprehensive instructions and recommendations for proper operation and maintenance.

B. All operations, maintenance and repair of this or any appliance must be performed by properly trained and qualified personnel, and all such operations, maintenance and repair must be performed in a diligent manner. It is the **responsibility of the owner/operator** to ensure proper training and diligence of any person coming into contact with either the subject units or the output (product, fumes or otherwise) of the subject units. It is the **responsibility of the owner/operator** to ensure that the subject units are installed and operated in accordance with OSHA Standard 1910.263.

C. A regular periodic program of cleaning, inspection and maintenance must be established and comprehensive maintenance records maintained. It is the **sole responsibility of the owner/operator** to establish, schedule and enforce the frequency and scope of these programs in keeping with recommended practice and with due consideration given to actual operating conditions.

D. The appliance must be operated within limits which will not exceed its working limits. It is the **responsibility of the user** to operate this appliance in accordance with the rules and limits described in this manual and the published product specification sheet, and in accordance with the directions and instructions of the owner/operator of the appliance or employer, and in accordance with applicable federal, state and local laws and ordinances.

TABLE OF CONTENTS

CHAPTER	PAGE
Read First	2
Specifications	4
Clearance Requirements	5
Conditions of Installation	6
Receiving and Unpacking	6
Installation	7
Reversing Conveyor Belt Direction	12
Servicing / Preventive Maintenance	13
Control Operation	14
Parts List	15
Wiring Diagram	22
Warranty	24

SPECIFICATIONS

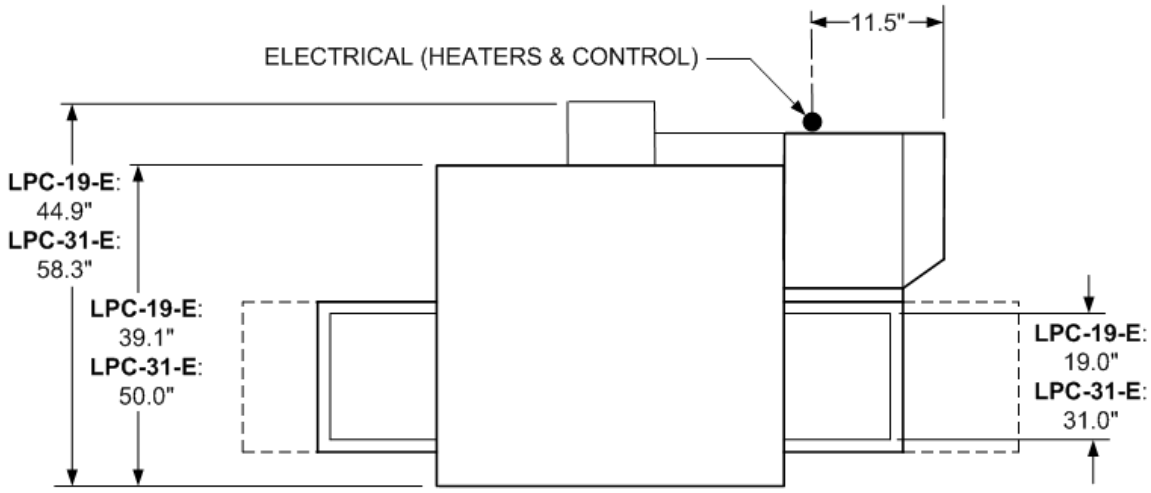

Top View

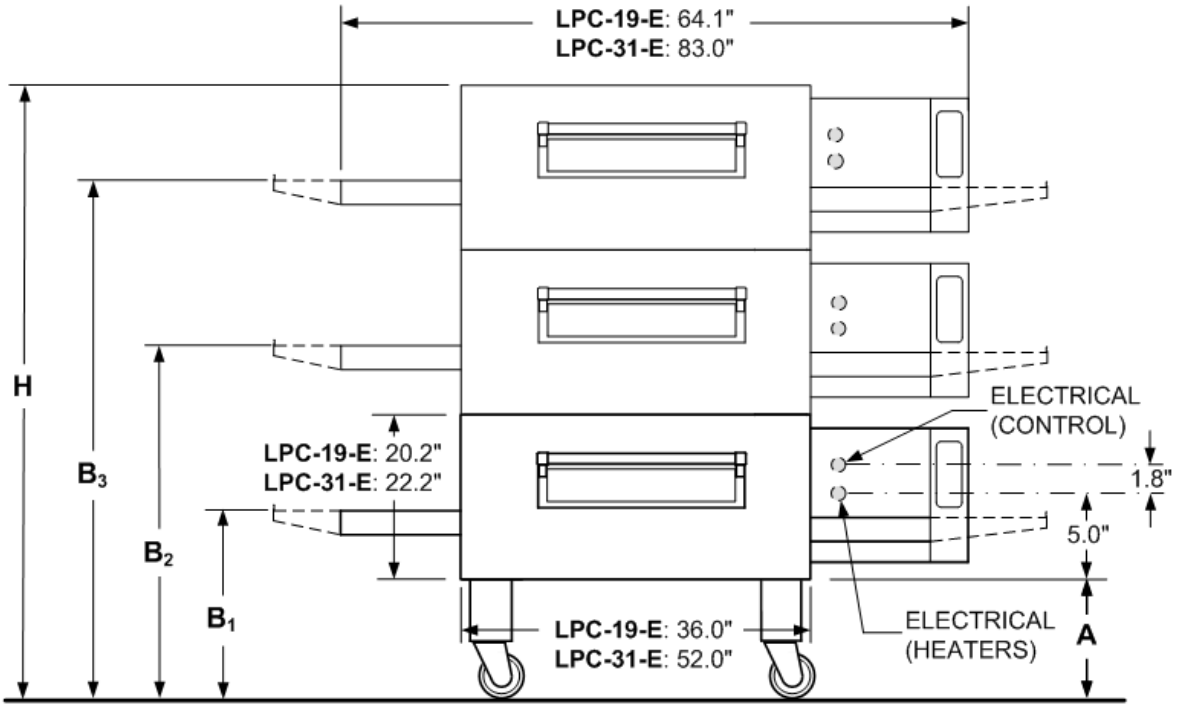

Front View

Appliance Dimensions:

Dims	LPC-19-E-1 (1 Deck)	LPC-19-E-2 (2 Decks)	LPC-19-E-3 (3 Decks)	LPC-31-E-1 (1 Deck)	LPC-31-E-2 (2 Decks)	LPC-31-E-3 (3 Decks)
A	21.7"	16.9"	5.6"	21.7"	16.9"	5.6"
B_1	32.6"	27.8"	16.6"	34.6"	29.8"	18.6"
B_2	N/A	48.0"	36.8"	N/A	52.0"	40.8"
B_3	N/A	N/A	57.0"	N/A	N/A	63.0"
H	43.8"	59.2"	68.2"	47.8"	65.2"	76.1"

CLEARANCE REQUIREMENTS

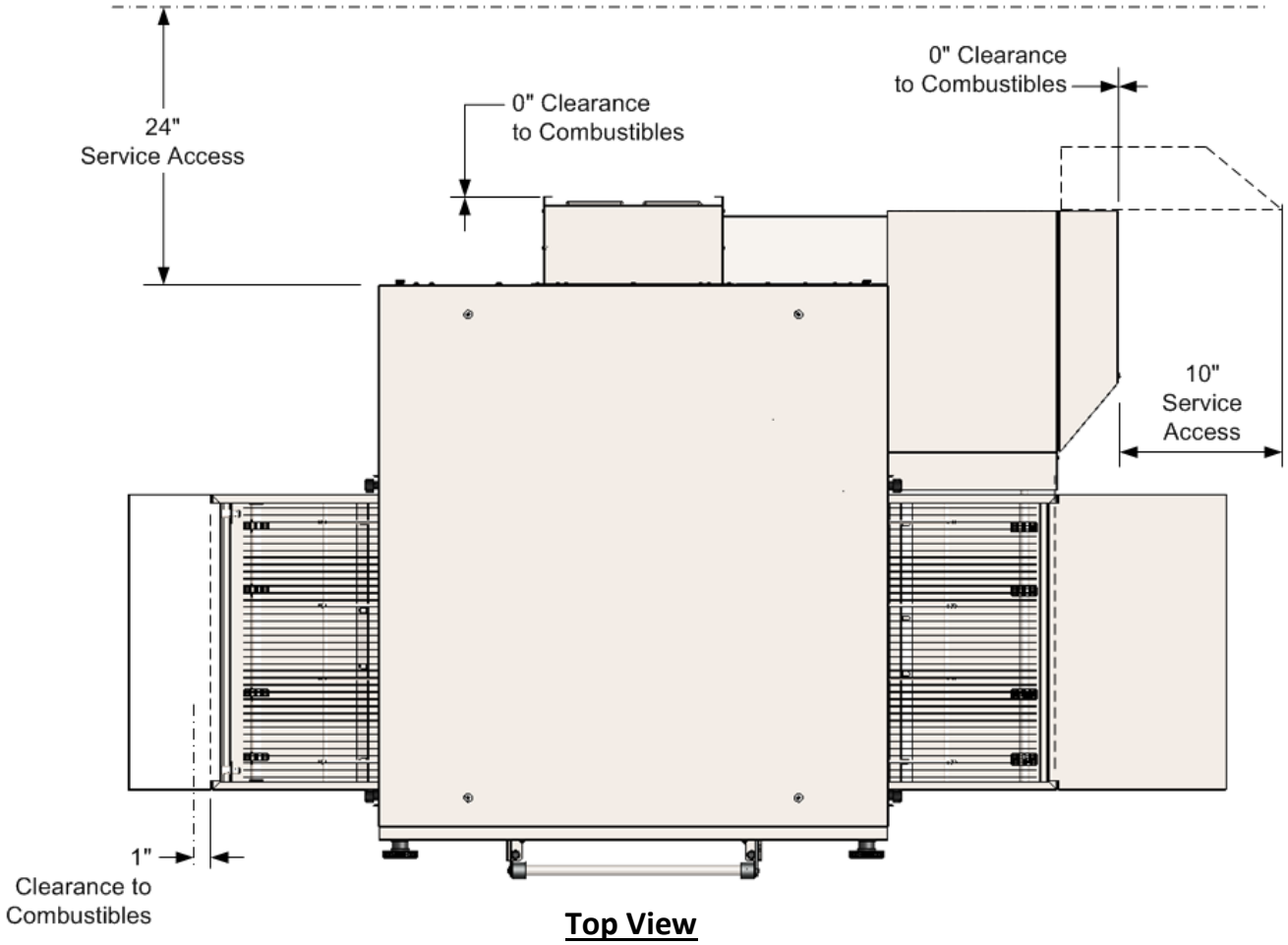

Top View

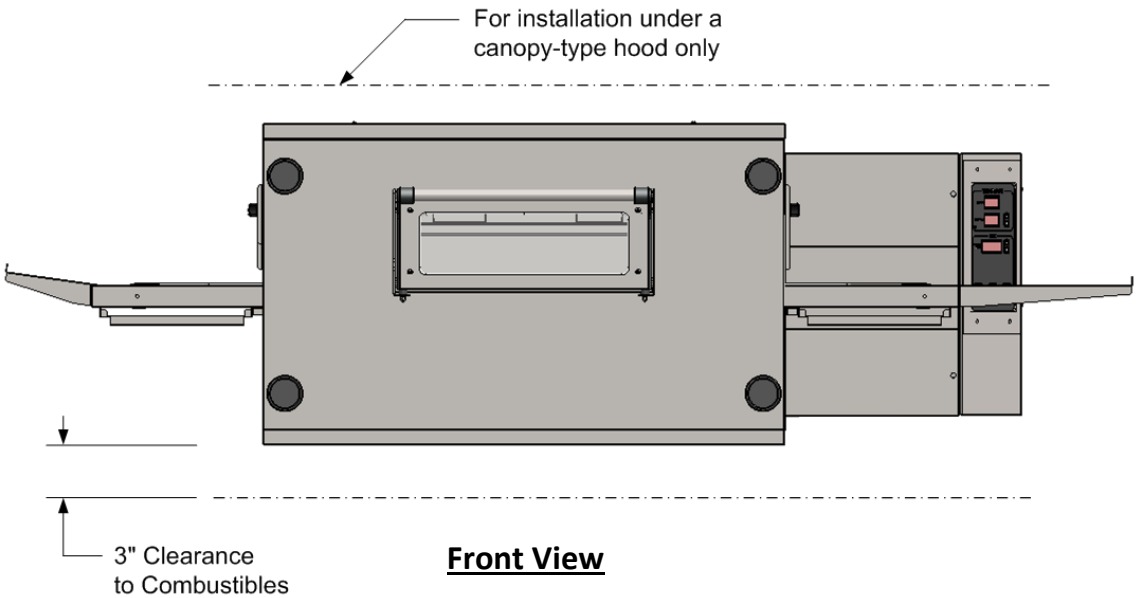

Front View

CONDITIONS of INSTALLATION

LBC Bakery Equipment shall, for a fee contingent on site location and provided that the conditions of installation are met, provide a factory-authorized service agency to install the LBC Rotisserie. The job site must be ready for installation before LBC Bakery Equipment or its authorized agent arrives. If the installation site is not properly prepared or if there are construction delays, the customer shall be responsible for all expenses incurred during this delay. All expenses resulting from job delay or extension, for reasons beyond the control of LBC Bakery Equipment, shall be the responsibility of the customer. Installation shall be conducted during normal business hours. This installation is for a single trip. **Start-up and training are not included.**

INSTALLATION MUST CONFORM WITH LOCAL CODES.

It is the **responsibility of the owner/operator** to do the following:

A. Secure all required permits and meet all local code requirements.
B. Ensure the installation site is cleared and ready for installation before the authorized installer arrives on site. The site shall be smooth and level.
C. Provide electric utilities within five (5) feet of installation location per specifications provided by LBC Bakery Equipment
D. Provide licensed trades person to make the final electrical and water connections.
E. Provide adequate ventilation, including vented hoods and associated roof penetrations.
F. Remove all packing materials, crates, etc. resulting from the installation.
G. Provide any sheet metal work required by local codes or otherwise to bridge gaps between appliance and adjacent walls or other building structures.

RECEIVING and UNPACKING

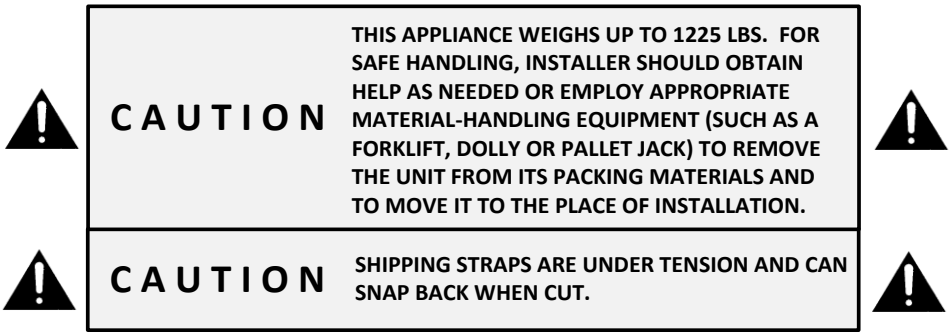

Receiving

Upon receiving the appliance, immediately check for damage (both visible and concealed) and loss. **Visible damage must be noted on the freight bill at the time of delivery and signed by the carrier's agent.** Concealed damage or loss means damage or loss which does not become apparent until the merchandise has been unpacked. **If concealed damage or loss is discovered upon unpacking, make a written request for inspection by the carrier's agent within 15 days of delivery.** All packing material should be kept for the inspection. **DO NOT return damaged merchandise to LBC Bakery Equipment; you must file your claim with carrier.**

Unpacking

Prior to unpacking, move the appliance as near to its intended location as practical. Existing packaging will help protect the oven from physical damage normally associated with moving it through hallways and doorways. The appliance will arrive inside a wood frame and affixed to a pallet. Remove the wood frame and strapping bands before lifting the unit from the pallet and placing in its intended location.

INSTALLATION (Part 1 of 7)

INSTALLATION MUST CONFORM WITH LOCAL CODES.

W A R N I N G	**INSTALLATION OF THIS APPLIANCE MUST BE DONE BY PERSONNEL QUALIFIED TO WORK WITH ELECTRICITY. IMPROPER INSTALLATION CAN CAUSE INJURY TO PERSONNEL AND/OR DAMAGE TO EQUIPMENT.**
C A U T I O N	**ALL ELECTRICAL, MECHANICAL, VENTILATION AND EXHAUST CONNECTIONS MUST MEET ALL FEDERAL, STATE AND LOCAL CODES OR ORDINANCES.**
C A U T I O N	**EACH OVEN MAY WEIGH UP TO 700 LBS. FOR SAFE HANDLING, INSTALLER SHOULD OBTAIN HELP AS NEEDED OR EMPLOY APPROPRIATE MATERIAL-HANDLING EQUIPMENT SUCH AS A FORKLIFT, DOLLY OR PALLET JACK.**
N O T I C E	**During the first few hours of operation, you may notice a small amount of smoke coming from the rotisserie and /or a faint odor. This is normal in a new oven and will disappear after a few hours of use.**

Clearances

Refer to Clearance Requirements section of this manual for spacing from combustible construction and clearances required for servicing or inspecting components.

Ventilation and Exhaust

VENTILATION AND EXHAUST REQUIREMENTS MUST COMPLY WITH THE NATIONAL FIRE PROTECTION ASSOCIATION STANDARD, NFPA 96, AS WELL AS ANY AND ALL LOCAL AND STATE CODES.

The conveyor oven must be installed under a ventilation hood. Hood must have adequate overhangs and exhaust rates to completely capture byproducts of combustion discharged from oven.

Lifting Individual Ovens

Note **safe lifting zones** indicated by red dashed lines and arrows on illustration below. Do not attempt to lift oven by edges not shown with a dashed line. **Refer to this illustration when moving oven(s) as called out on the following installation steps.**

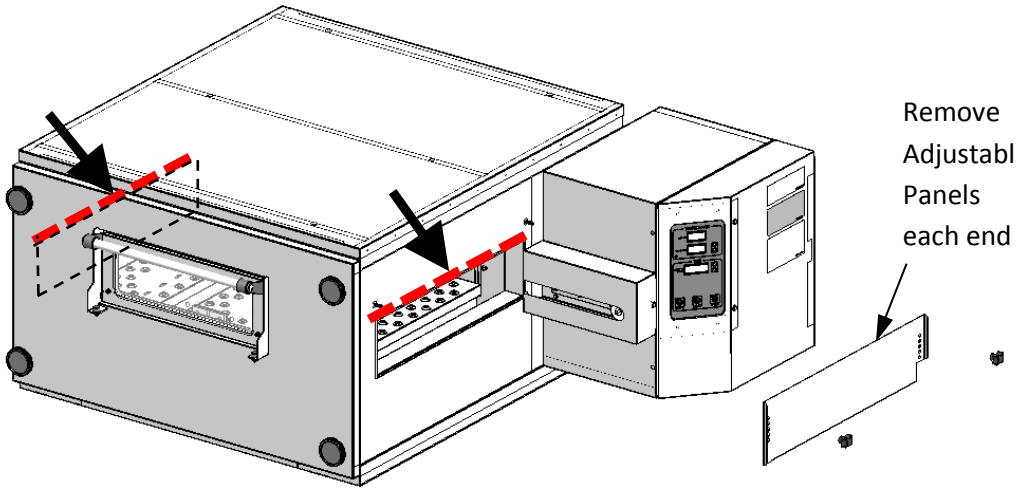

INSTALLATION (Part 3 of 7)

Base and Casters

Depending upon model, appliance will be supplied with either a base with swivel casters or swivel casters only. (Single-stacked and double-stacked ovens are installed on base with casters; triple-stacked ovens are installed on casters only.) Locate base panel and secure base or casters to underside of it as shown below. Use 16 each M8 X 20mm hex bolts, M8 plain washers and M8 lock washers provided. Once this is done, lift the oven onto the base panel sub-assembly. Remove oven front panel and rear panel and secure oven to base panel (4 places LPC-19-E, 8 places LPC-31-E) through the oven cook chamber floor. Use M6 X 20mm truss head screws, 6mm flat washers and 6mm lock washers provided.

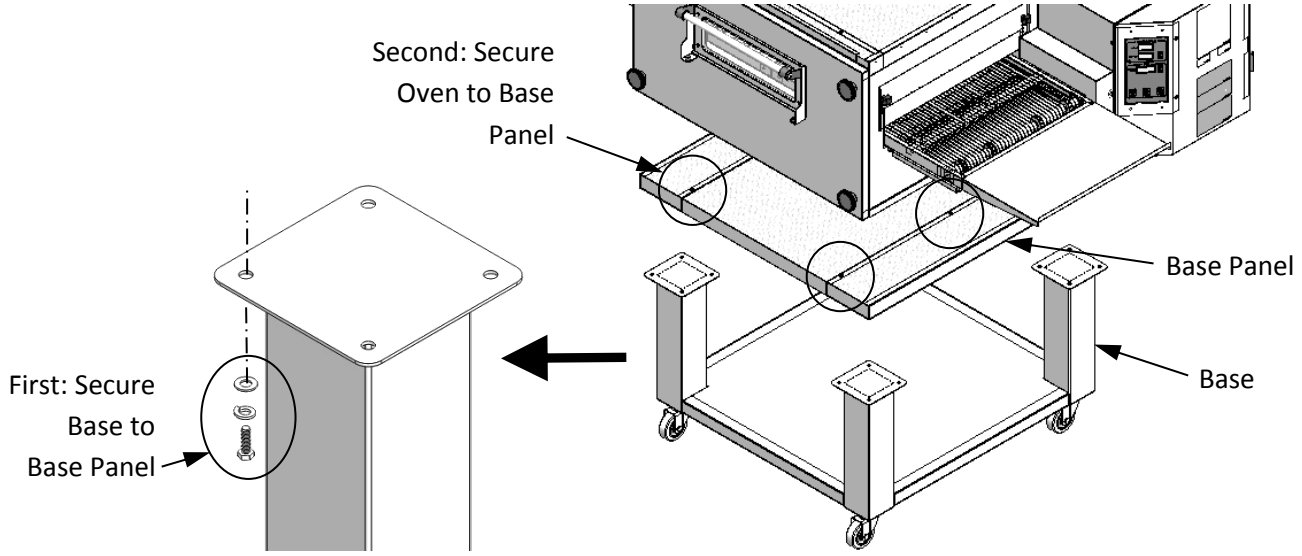

Single-Stacked and Double-Stacked Ovens

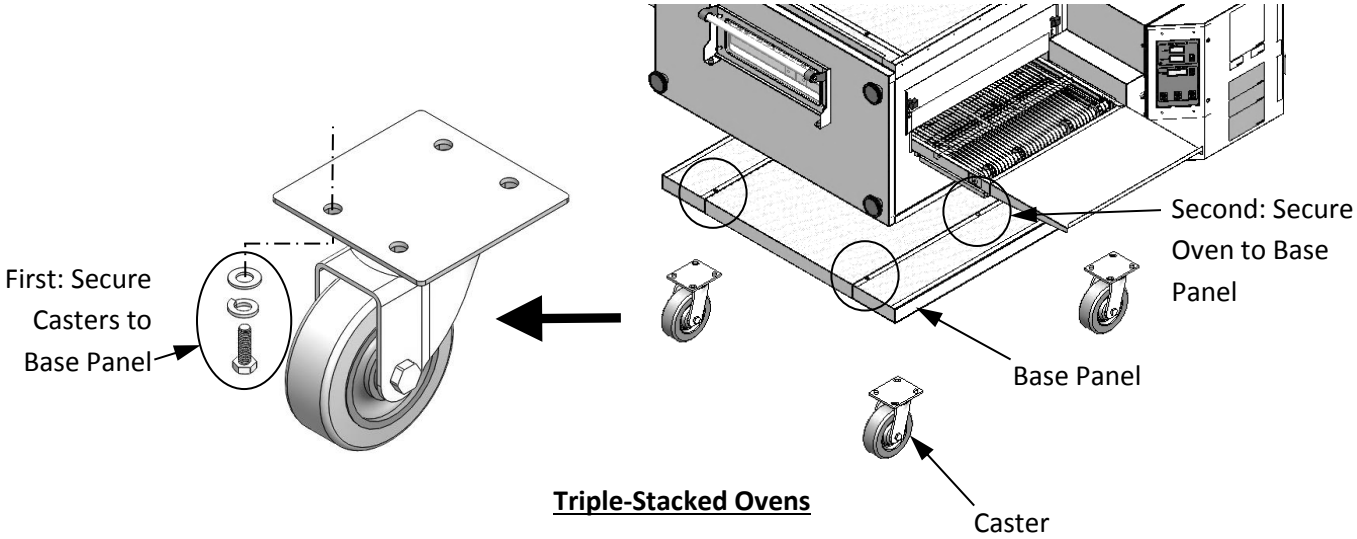

Triple-Stacked Ovens

Leveling

Once assembled, move oven to desired location and check level. If oven is not level, loosen bolts at leg or caster mount plates and shim between plates and underside of oven with washers as needed. Once level, re-tighten hex bolts.

INSTALLATION (Part 4 of 7)

Stacking (For single ovens, skip to next step)

Lift stacked oven onto bottom oven. Place hands only in safe lifting zones as noted previously in this section. Align top oven bottom flange over bottom oven and gently lower into place. Bottom flange of top oven should slide over bottom oven as shown below. Repeat this step for triple stacked ovens.

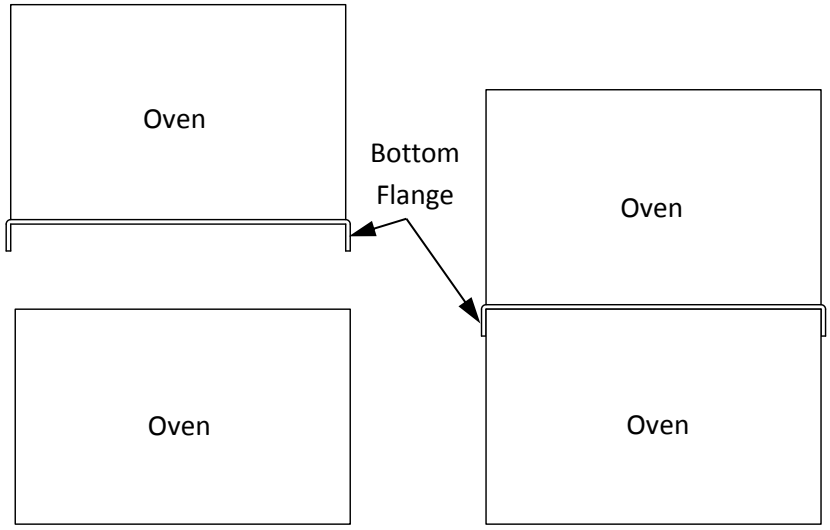

Remove front and rear oven panels of stacked oven(s). Do not remove panels of bottom oven. Locate 4 each holes in bottom flanged panel of each oven. Secure each pair of ovens together through these holes with 4 each M6 X 20mm truss head screws, plain washers and lock washers provided.

Install Top Panel

Secure Top Panel to top of top oven. For LPC-19-E, use 4 each M6 X 20mm truss head screws provided. For LPC-31-E, use 8 each M6 X M50mm truss head screws provided.

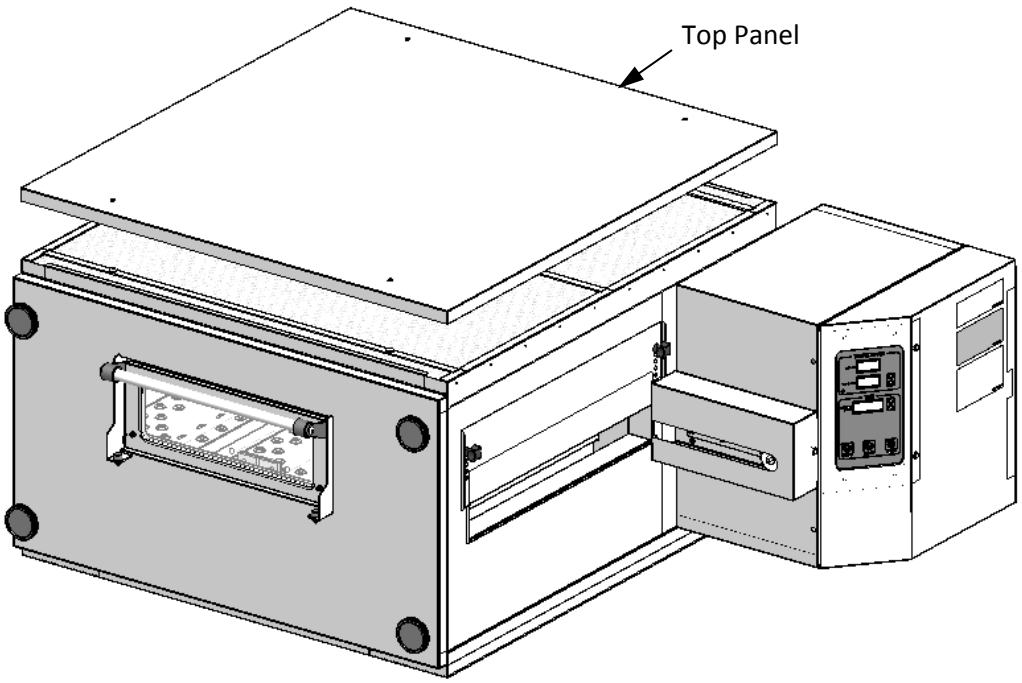

INSTALLATION (Part 5 of 7)

Conveyor Belt Installation

C A U T I O N

THE CONVEYOR BELT ASSEMBLY IS HEAVY. FOR SAFE HANDLING, OBTAIN HELP AS NEEDED OR EMPLOY MATERIAL-HANDLING EQUIPMENT TO PERFORM THIS STEP.

Remove chain cover attached to side of control compartment (see Illustration 1), exposing driver sprocket. From control side of cook chamber, place end of conveyor belt onto oven opening with pre-installed driven sprocket on belt oriented toward driver sprocket (Illustration 2) and slide belt assembly into cook chamber until end of conveyor extends through far side oven opening. Install chain provided between driver sprocket and driven sprocket. Lift and slide conveyor belt into cook chamber to minimize distance between driver and driven sprockets and loop chain over both sprockets (Illustration 3). Once chain is correctly engaged on both sprockets, pull belt assembly toward control end of bake chamber until chain is taut and conveyor frame is properly seated. Lastly, reinstall chain cover.

Illustration 1

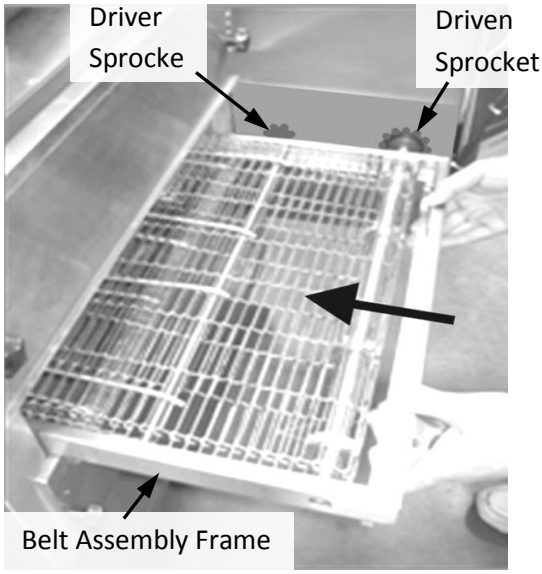

Illustration 2

Illustration 3

INSTALLATION (Part 6 of 7)

Conveyor Belt Tension Adjustment

Lift conveyor belt and measure distance from belt to top of conveyor frame (Illustration 1). Distance should be between 2" and 3". To adjust tension, turn belt tension-adjustment knobs at corners of conveyor frame opposite sprocket end (Illustration 2). **NOTE: Conveyor must be cool when adjusting belt.**

Illustration 1

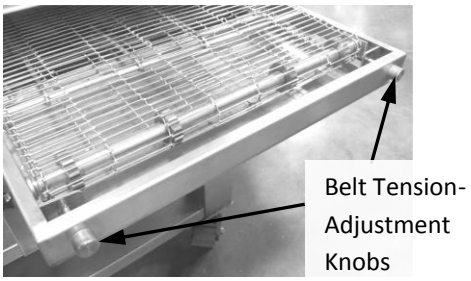

Illustration 2

Electrical Connection

APPLIANCE, WHEN INSTALLED, MUST BE ELECTRICALLY GROUNDED IN ACCORDANCE WITH LOCAL CODES, OR IN THE ABSENCE OF LOCAL CODES, WITH THE *National Electric Code, ANSI/NFPA 70,* OR *The Canadian Electrical Code, CSA C22.2,* AS APPLICABLE.

WARNING

THIS APPLIANCE IS EQUIPPED WITH A THREE-PRONG (GROUNDING) PLUG FOR YOUR PROTECTION AGAINST SHOCK HAZARD AND SHOULD BE PLUGGED DIRECTLY INTO A PROPERLY GROUNDED THREE-PRONG RECEPTACLE. DO NOT CUT OR REMOVE THE GROUNDING PRONG FROM THIS PLUG.

Connect oven(s) to a power source. For dimensional locations of cord connect points, refer to Specifications section of this manual. For circuit requirements and breaker sizes for each deck, refer to this table:

Model	Circuit	Voltage / Hz / ph	kW	MCA	MOP
LPC-19-E	Heat	208 / 60 / 3	16	60	70
		240 / 60 / 3	16	50	60
	Control	120 / 60 / 1	N/A	15	20
LPC-31-E	Heat	208 / 60 / 3	28	100	115
		240 / 60 / 3	28	85	90
	Control	120 / 60 / 1	N/A	15	20

Functional Check (Also refer to Controller Operation section of this manual)

Turn wall breaker on to energize oven and verify:

- Oven controller Power button LED is on

Turn oven on at Power button and verify:

- All controller displays illuminate

Press Conveyor button to turn conveyor on and verify:

- Belt consistently engages center sprockets without slipping off teeth
- All adjacent center sprockets engage the same belt link

INSTALLATION (Part 7 of 7)

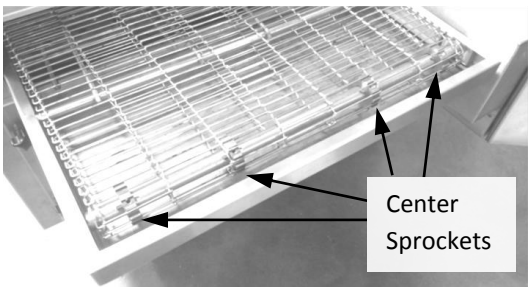

Press Fan button to turn fan on and verify:

- Heat-circulation fan turns on
- Fan button LED illuminates

Calibrate Oven Temperature, if required. Insert a thermocouple inside the cook chamber and place on the conveyor belt. Route the probe wire out of the loading door opening and adjust the oven set point to 350°F. Allow the oven to reach the set point and stabilize for at least 90 minutes. If the thermocouple reading and the controller actual temperature differ by more than a couple degrees, the control must be calibrated. To begin, make a note of the temperature difference between the thermocouple and the controller actual temperature, then turn the control power button off and hold the fan off/on button for 3 seconds until a value appears in the set point display. Use the set point up or down arrow to add or subtract the difference in temperature. (EXAMPLE: If the thermocouple is 10° higher than the actual temperature, add 10. If the thermocouple is 10° lower than the actual temperature, subtract 10.) Turn the control button on and re-check the thermocouple against the controller actual temperature. Repeat this procedure until the two temperatures match.

Reversing Belt Direction

Belt direction switch can be found at backside of control box. Set to desired position.

Chain Restraint Kit

Secure the appliance to a building structure with a chain restraint. Affix one end of restraint to rear panel of oven. Two holes must be drilled to affix 2-hole plate located on either end of restraint. A drill bit and mounting hardware are provided in chain restraint kit.

Final Inspection

Verify the following:

- All screws and connections are tight
- Gas connections are tight and do not leak
- Sandwich door opens and closes easily and remains closed while in vertical position
- Fingerprints, dirt and sticker residue have been cleaned from oven

SERVICING / PREVENTIVE MAINTENANCE

SERVICE WORK MUST CONFORM WITH LOCAL CODES, OR IN THE ABSENCE OF LOCAL CODES, WITH THE *National Fuel Gas Code, ANSI Z223.1/NFPA 54,* OR *The National Gas and Propane Installation Code, CSA B149.1,* AS APPLICABLE.

C A U T I O N	**THIS APPLIANCE AND ITS INDIVIDUAL SHUTOFF VALVE MUST BE DISCONNECTED FROM THE GAS SUPPLY PIPING SYSTEM DURING ANY PRESSURE TESTING OF THAT SYSTEM AT TEST PRESSURES IN EXCESS OF ½ psi [3.5 kPa].**
C A U T I O N	**THIS APPLIANCE MUST BE ISOLATED FROM THE GAS SUPPLY PIPING SYSTEM BY CLOSING ITS INDIVIDUAL MANUAL SHUTOFF VALVE DURING ANY PRESSURE TESTING OF THAT SYSTEM AT TEST PRESSURES EQUAL TO OR LESS THAN ½ psi [3.5 kPa].**
N O T I C E	Service on this or any other LBC appliance must be performed by qualified personnel. For an approved service representative in your area, visit our website at www.lbcbakery.com or call our factory toll free at 1-888-722-5686.

Clearances

Refer to Clearance Requirements section of this manual for spacing from combustible construction and clearances required for servicing or inspecting components.

Electrical

Before servicing, disable power supply to oven. Disconnect plug(s) from electrical outlet(s). If oven has been installed with a junction-box, disable power at wall breaker and lock-out/tag-out per customer's procedures. Check all electrical terminal screws in control compartment and tighten as needed. After servicing is complete and after appliance has been returned to its originally-installed position, reconnect power and/or turn breaker back on.

Chain Restraint

The oven has been supplied with a chain restraint. If disconnection of restraint is necessary for servicing, reconnect restraint after servicing is complete and after appliance has been returned to its originally-installed position.

Main Motor

Check main motor cooling vents for accumulations of lint or other debris and clean as required. NOTE: Main motor bearings are fully enclosed and do not require lubrication.

Cooling Fan

Check cooling fan for accumulations of lint or other debris and clean as required.

CONTROL OPERATION

N O T I C E	During the first few hours of operation, you may notice a small amount of smoke and/or a faint odor coming from the appliance. This is normal in new equipment and will disappear after a few hours of use.

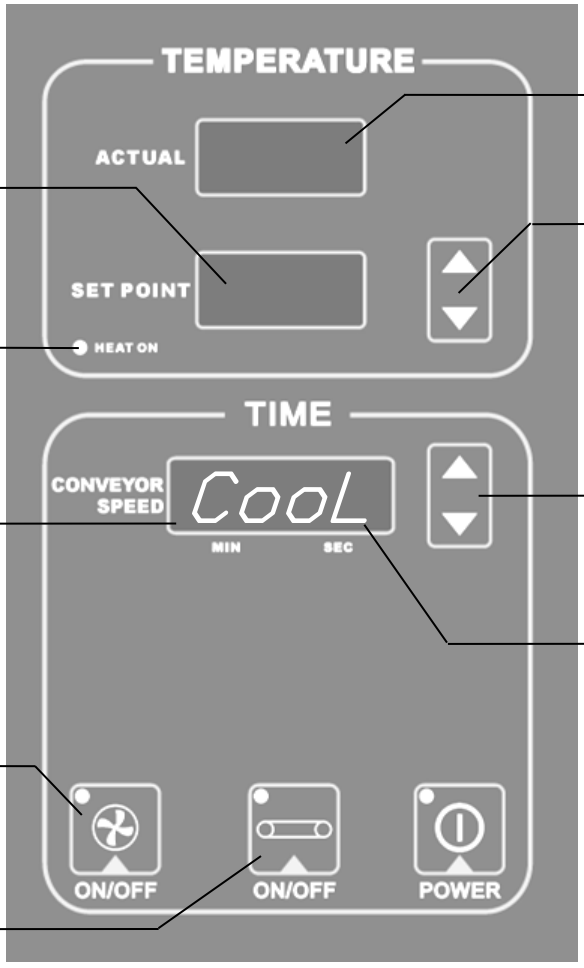

Set Point Display
Use Set Point arrows to set temp. Set temp will appear in this display.

Heat On Light
This light illuminates when heaters are on.

Conveyor Speed Display
Use Conveyor Speed arrows to set desired belt speed. Belt speed will appear in this display in minutes and seconds.

Fan On/Off Button
Use to turn the heat circulation fans on and off.

Conveyor Belt On/Off Button
Use to turn the conveyor

Actual Temp Display
This is the actual temp inside cook chamber.

Set Point Buttons
Use to set temp.
Change Temperature Scale
Simultaneously press-and-hold both arrows for 3 sec to change from ^{o}F to ^{o}C and back.

Conveyor Speed Buttons
Use to change the conveyor belt speed.

Cool-Down Feature
On shutdown, if cook chamber temp is ≥200°F, heaters will turn off while heater fans continue to run. When chamber temp drops below 200°F, fans will stop and control will turn off. "CooL" will appear in Conveyor Speed display whenever Cool-Down Feature is active.

PARTS LIST (Part 1 of 8)

WARNING	**BOTH HIGH AND LOW VOLTAGES ARE PRESENT INSIDE OF THIS APPLIANCE WHEN THE UNIT IS PLUGGED/WIRED INTO A LIVE RECEPTACLE. BEFORE REPLACING ANY PARTS, DISCONNECT THE UNIT FROM THE ELECTRIC POWER SUPPLY.**
CAUTION	**USE OF ANY REPLACEMENT PARTS OTHER THAN THOSE SUPPLIED BY LBC OR THEIR AUTHORIZED DISTRIBUTORS CAN CAUSE BODILY INJURY TO THE OPERATOR AND/OR DAMAGE TO THE APPLIANCE AND WILL VOID ALL WARRANTIES.**
NOTICE	Service on this or any other LBC appliance must be performed by qualified personnel. For an approved service representative in your area, visit our website at www.lbcbakery.com or call our factory toll free at 1-888-722-5686.

To order any of the optional parts or accessories listed below, visit our website at www.lbcbakery.com. You may also call our factory toll free at 1-888-722-5686, or email us at service@lbcbakery.com.

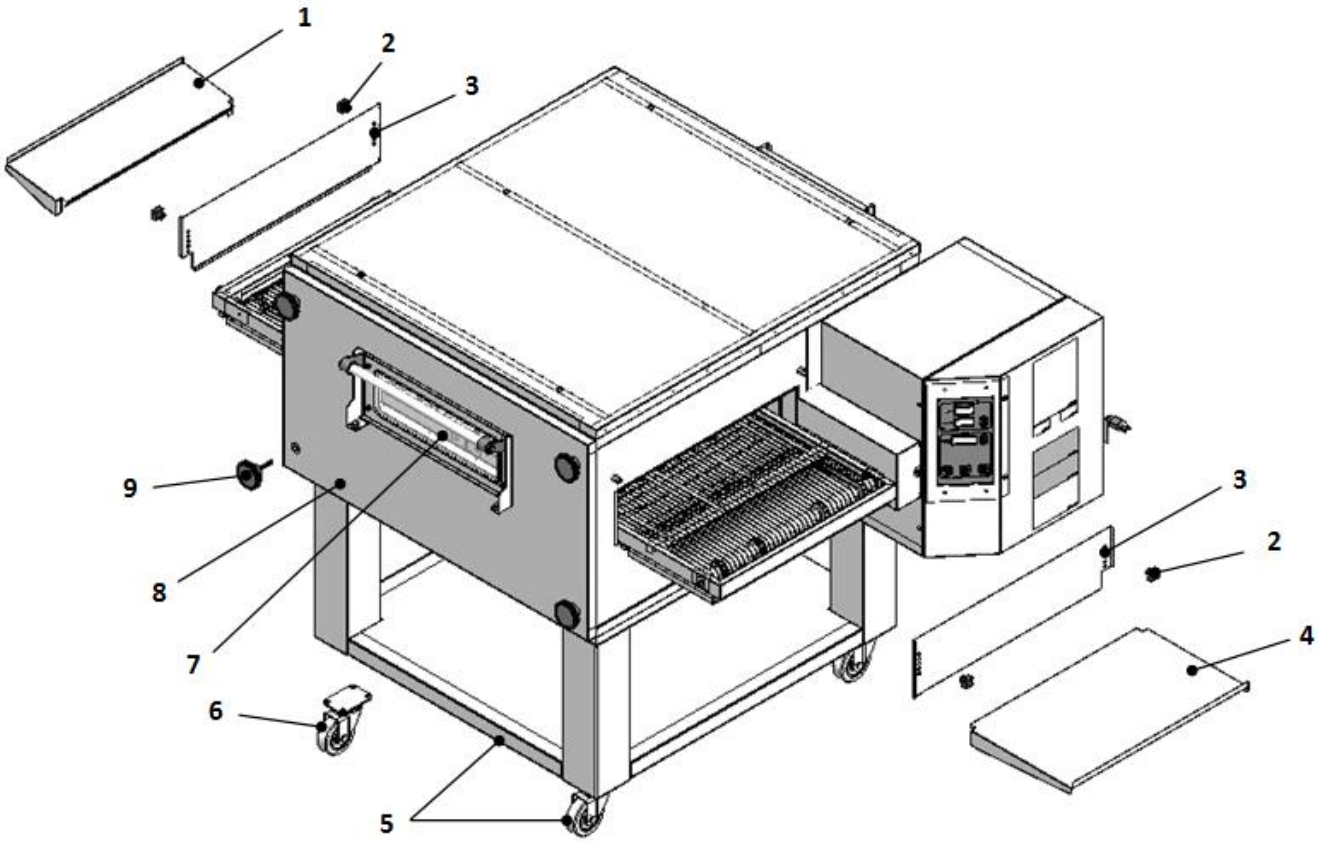

Main Assembly

PARTS LIST (Part 2 of 8)

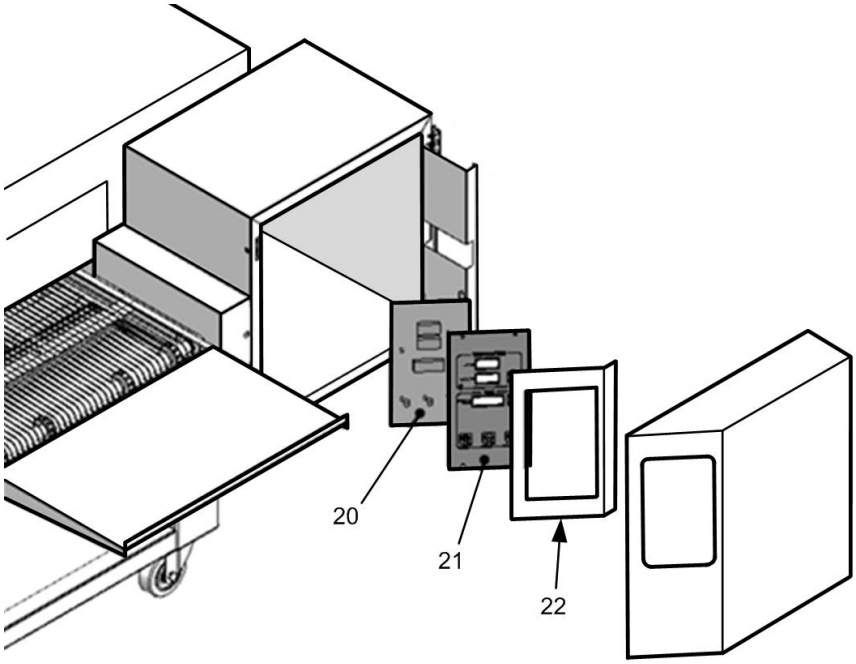

Controller Parts

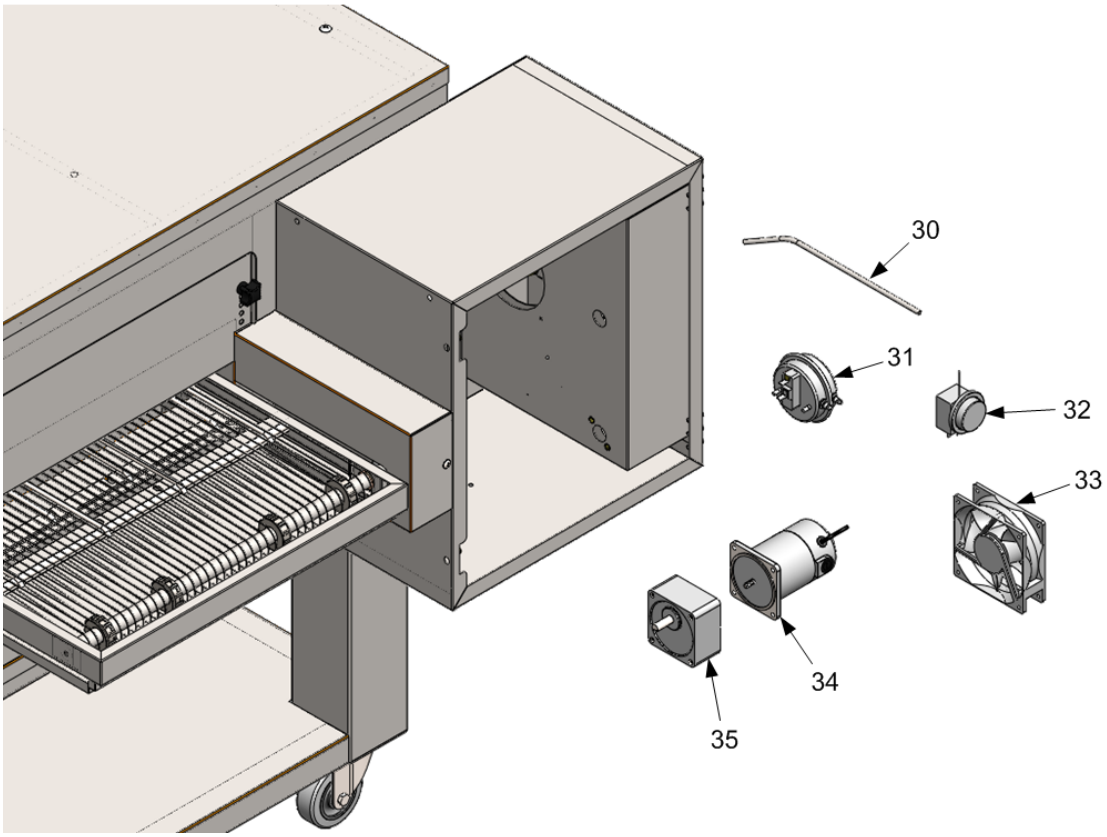

Forward Control Compartment Parts (Continued)

PARTS LIST (Part 3 of 8)

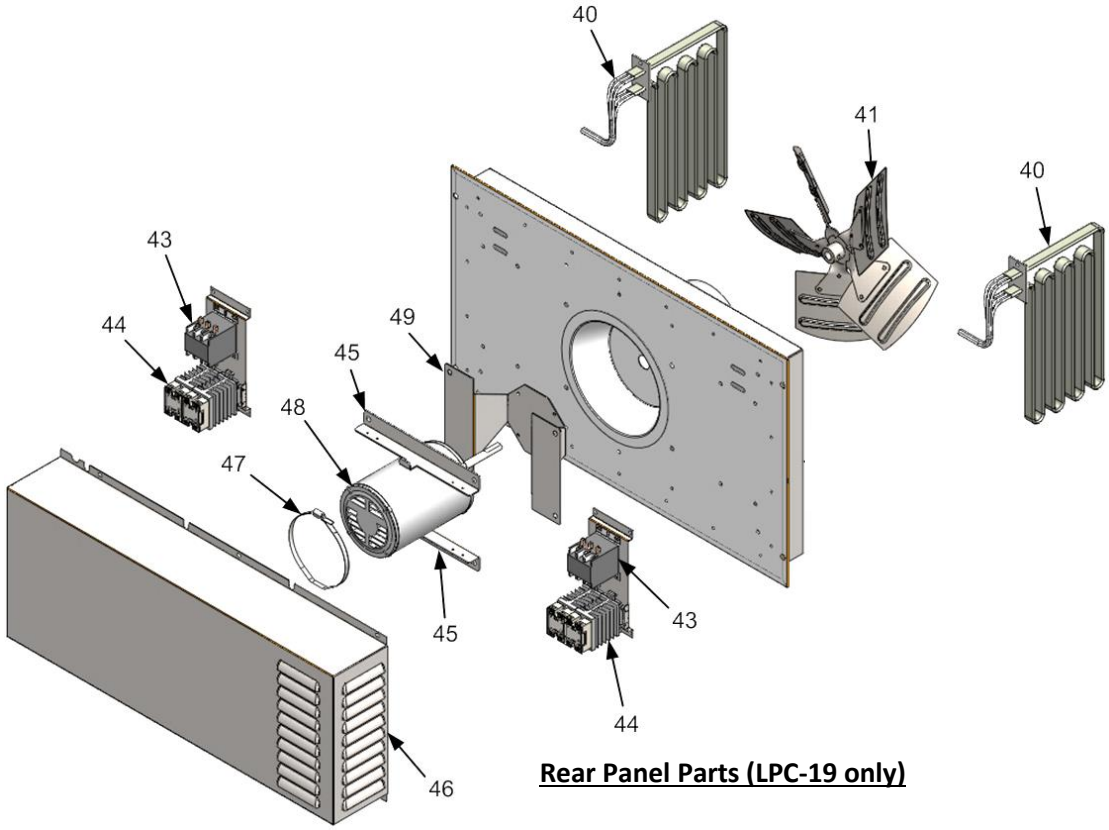

Rear Panel Parts (LPC-19 only)

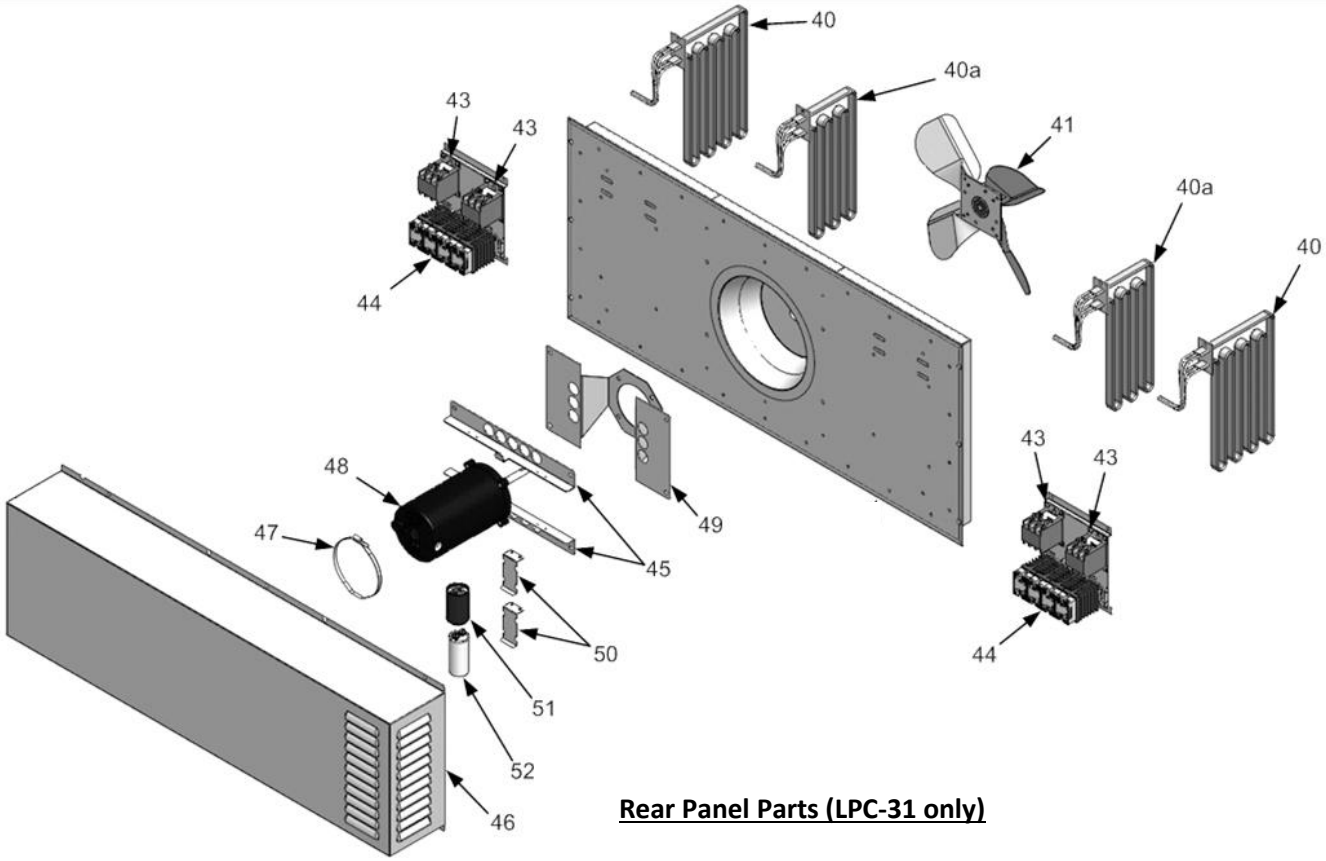

Rear Panel Parts (LPC-31 only)

PARTS LIST (Part 4 of 8)

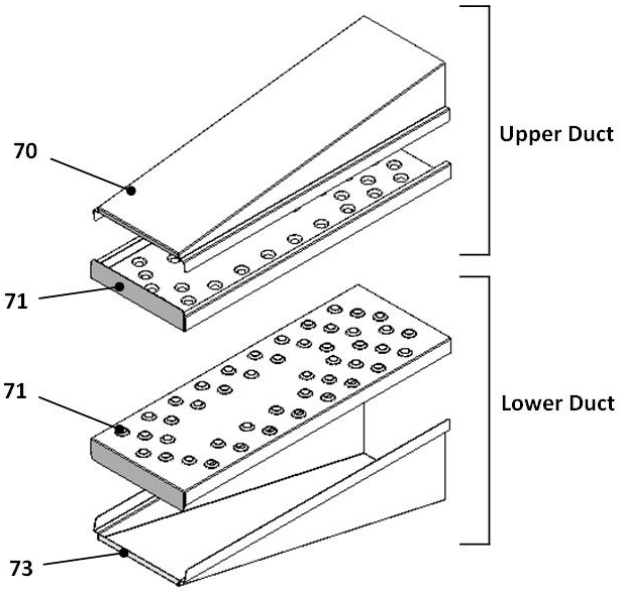

Horizontal Duct Parts

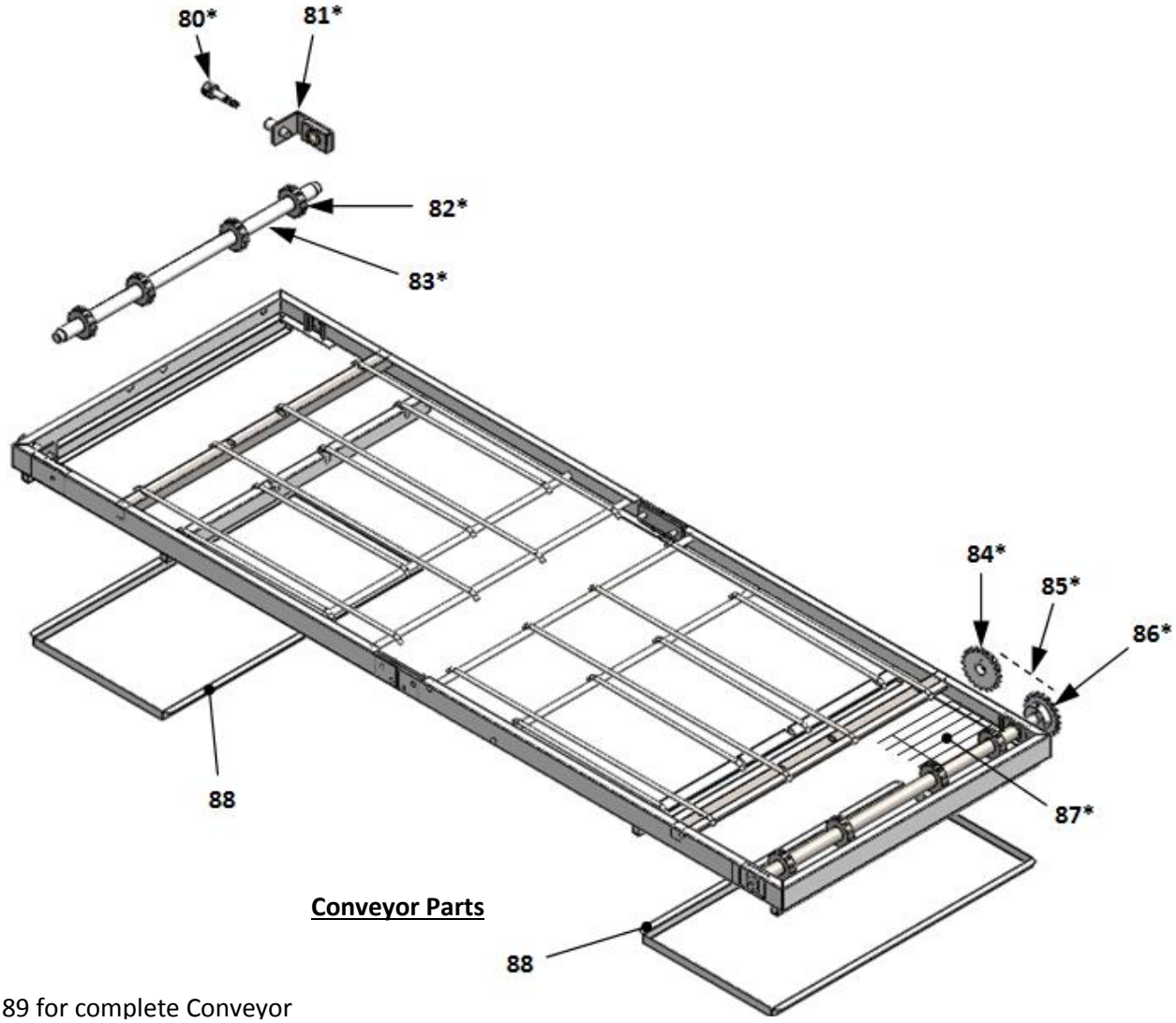

Conveyor Parts

* See 89 for complete Conveyor

PARTS LIST (Part 5 of 8)

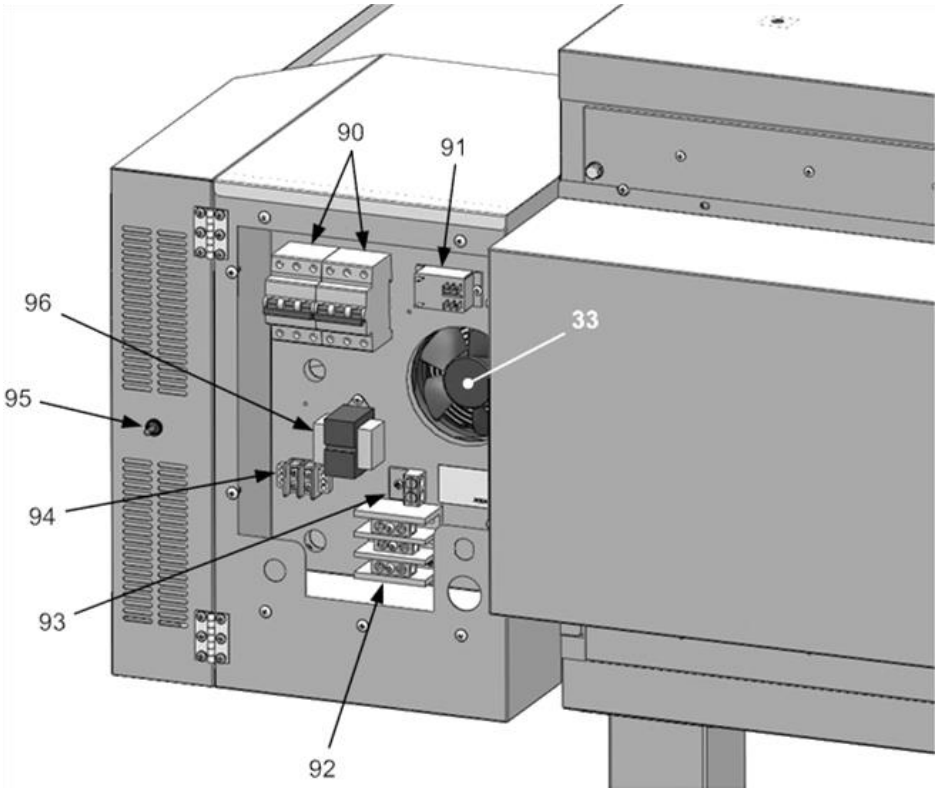

Rear Control Compartment Parts

PARTS LIST (Part 6 of 8)

Item No.	Part Description	Quantity Per Oven	Part No.	Usage
1	Shelf Extender – Entrance (6”)	1	190-189	LPC-19 only
			190-189-1	LPC-31 only
2	Knob, Adjustable Door	4	190-372	
3	Adjustable Door	2	190-143-3	LPC-19 only
			190-143-1	LPC-31 only
4	Shelf Extender – Exit (12”)	1	190-188	LPC-19 only
			190-188-1	LPC-31 only
5	Base with Casters	1	190-787	LPC-19, 1-stack only
			190-787-1	LPC-19, 2-stack only
			190-797	LPC-31, 1-stack only
			190-797-1	LPC-31, 2-stack only
6	Caster	4	72901-25	All 3-stacks only
7	Sandwich Door	1	190-777	
8	Front Panel	1	190-770	LPC-19 only

PARTS LIST (Part 6 of 8)

8	Front Panel	1	190-770	LPC-19 only
			190-770-1	LPC-31 only
9	Knob, Front Panel	4	190-778-1	
20	Main Control		40102-79	
21	Control Panel + Control Label	1	190-153 + 190-154	
22	Bracket, Control Mount	1	190-145	
30	Tube – Air Switch	1	190-159	LPC-19 only
		1	190-159-1	LPC-31 only
31	Pressure Switch	1	30808-05	
32	High Limit	1	30401-33	
33	Axial Fan	1	30200-45	
34	Motor, Belt	1	30200-70	
35	Gear Reducer	1	30200-78	
40	Element	2	190-112-208	All 208V ovens
			190-112-240	All 240V ovens
40a	Element	2	190-112-1-208	LPC-31, 208V only
			190-112-1-240	LPC-31, 240V only
41	Fan, Heat Circulation	1	71500-16	LPC-19 only
			71500-17	LPC-31 only
43	Contactor	2	30700-17	LPC-19 only
		4	30700-17	LPC-31 only
44	Solid State Relay	4	30701-09	LPC-19 only
		8	30701-09	LPC-31 only
45	Angle, Motor Mount	2	190-315	LPC-19 only
			190-315-2	LPC-31 only
46	Cover, Back Panel	1	190-368-1	LPC-19 only
			190-368-3	LPC-31 only
47	Band, Motor	1	71700-03	

48	Motor – 3/4 hp	1	30200-84	LPC-19 only
	Motor – 1 hp	1	30200-85	LPC-31 only
49	Body, Motor Mount	1	190-316	LPC-19 only
			190-316-1	LPC-31 only
50	Bracket, Capacitor	2	190-413	
51	Capacitor	1		
52	Capacitor	1		
70	Body, Upper Duct	2	190-324	LPC-19 only
		4	190-415	LPC-31 only
71	Plate, Duct	5	190-323-2	LPC-19 only
		9	190-414	LPC-31 only
73	Body, Lower Duct	3	190-325	LPC-19 only

		5	190-415	LPC-31 only
80	Knob, Belt Tensioner	2	190-297	
81	Belt Tensioner	2	190-743	
82	Sprocket, Belt	8	SP636-80-1	LPC-19 only
		10	SP636-80-1	LPC-31 only
83	Shaft, Conveyor	1	SP636-70-3	LPC-19 only
			SP636-70-4	
			190-267	LPC-31 only
			190-268	
84	Sprocket, Drive	1	73000-07	
85a	Chain	1	73100-08	
85b	Connecting Link for item 85a	1	73100-07	
86	Sprocket, Driven	1	SP636-80-5	
87	Belt, Conveyor	1	SP636-70-6	LPC-19 only
			SP636-70-7	LPC-31 only
88	Crumb Tray	2	190-180-70-15	LPC-19 only
			190-263	LPC-31 only
89	Conveyor Belt Assembly	1	190-180-70	LPC-19 only
			190-1780-70-1	LPC-31 only
90	Breaker	2	ABB S203-C63	
91	Relay	1	30701-05	
92	Power Distribution Block	1	30500-07	
93	Ground Connector	1	31200-08	
94	Power Distribution Block	1	30500-01	
95	Switch, Belt Direction	1	30303-06	
96	Transformer	1	31400-26	

PARTS LIST (Part 8 of 8)

Item No.	Part Description	Quantity Per Oven	Part No.	Usage
120	Flame Sensor Rod	1	41100-36-1	
121	Hot Surface Ignitor	1	80302-12	
122	Shutter, Air – Burner	1	190-330-1	
123	Burner Assembly	1	190-764	LPC-19 only
			190-764-3	LPC-31 only

WIRING DIAGRAM (Part 1 of 2)

Wiring diagrams are also located on the inside of the control compartment cover.

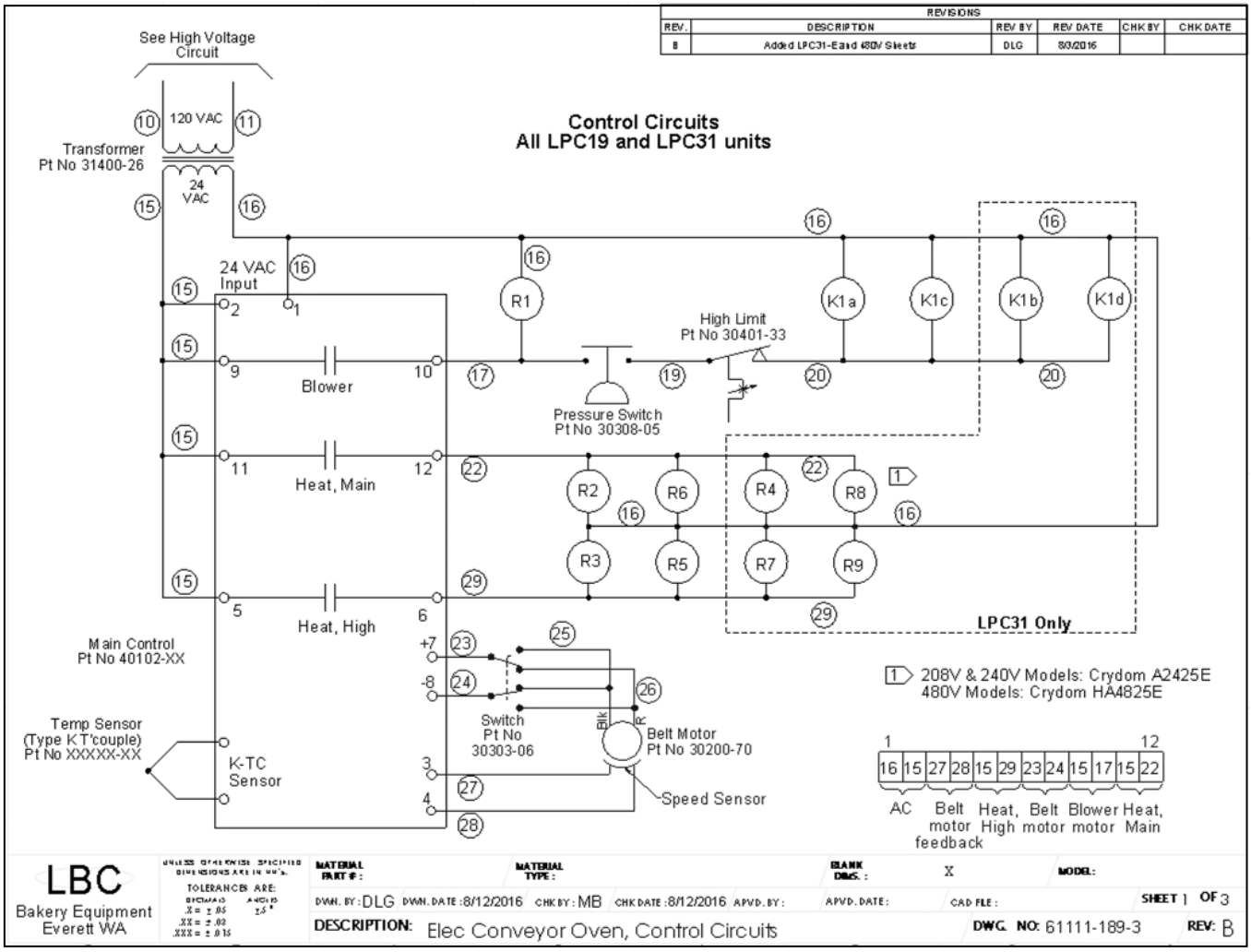

WIRING DIAGRAM (Part 2 of 2)

Wiring diagrams are also located on the inside of the control compartment cover.

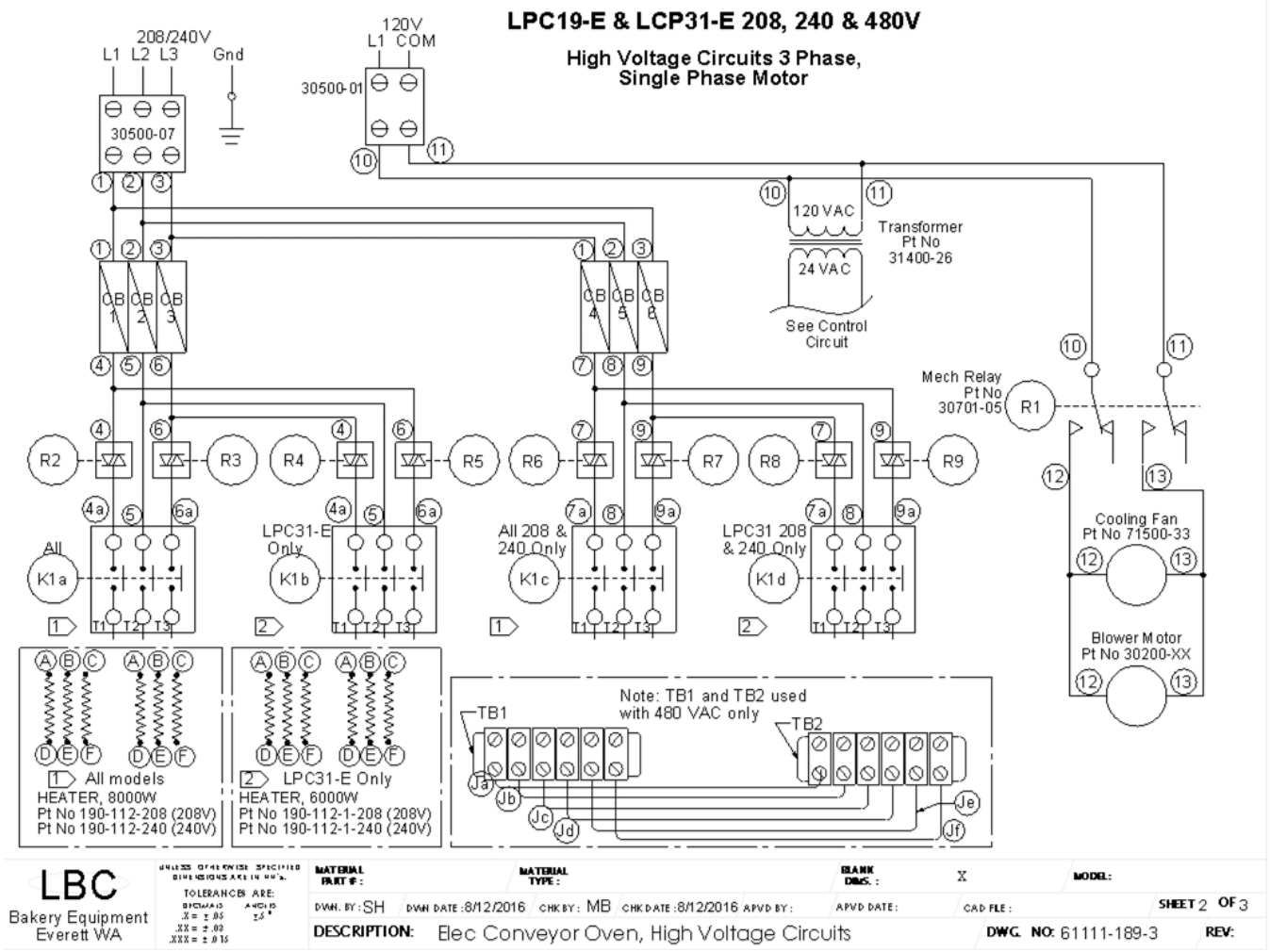

Element Connection Table

	K1a		
	T1	T2	T3
LPC19-E	A1	B1	C1
208/240	F1	D1	E1
LPC19-E	A1	B1	C1
480	T1	T2	T3

K1c		
T1	T2	T3
A2	B2	C2
F2	D2	E2

	K1a			K1b			K1c			K1d		
	T1	T2	T3	T1	T2	T3	T1	T2	T3	T1	T2	T3
LPC31-E	A1	B1	C1	A3	B3	C3	A2	B2	C2	A4	B4	C4
208/240	F1	D1	E1	F3	D3	E3	F2	D2	E2	F4	D4	E4
LPC31-E	A1	B1	C1				F2	D2	E2			
480	A3	B3	C3				F4	D4	E4			

	TB1						TB2					
	a	b	c	d	e	f	a	b	c	d	e	f
LPC19-E	D1	E1	F1	T1	T2	T3	A2	B2	C2	F2	D2	E2
480	Ja	Jb	Jc	Jd	Je	Jf	Ja	Jb	Jc	Jd	Je	Jf

	TB1						TB2					
	a	b	c	d	e	f	a	b	c	d	e	f
LPC31-E	F1	D1	E1	F2	D2	E2	A3	B3	C3	A4	B4	C4
480	Ja	Jb	Jc	Jd	Je	Jf	Ja	Jb	Jc	Jd	Je	Jf

LIMITED WARRANTY

LBC Bakery Equipment ("LBC Equipment") has been skillfully manufactured, carefully inspected and packaged to meet rigid standards of excellence. LBC Bakery Equipment, Inc. (LBC) warrants products produced and sold by LBC and its duly authorized agents against defects in materials and workmanship within the following limitations:

What is Provided:

- Limited replacement parts as specified below, including standard ground shipping from LBC or service parts center when required.
- Limited labor for repair as specified below, including authorized service agent's transportation, portal to portal, up to one hundred (100) miles round trip and two (2) hours travel time.
- LBC, or an authorized service representative, will repair or replace, at LBC's sole discretion, any LBC equipment, including but not limited to the listed exclusions.

Coverage Period:

Extending from the date of shipment from LBC or its duly authorized dealer/distributor for the specified period:

- LRO and LMO Model Rack Ovens, LRP Model Rack Proofers, LRPR Model Retarder Proofers, LCR Model Rotisseries and LHC Model Holding Cabinets for a period of one (1) year limited parts and labor.
- Replacement parts shall be warranted for a period of ninety (90) days after installation by an authorized LBC service agent.

Conditions:

- Covered equipment must have been properly installed according to the requirements of the installation manual and all applicable local codes.
- The equipment shall not have been abused, misused or neglected or used for purposes other than intended by LBC.
- Water connected to the appliance shall have been in compliance with the following requirements:
  - Cold Water: 30 - 80 PSI
  - pH: 7 - 7.5
  - Conductivity: < 1/500,000 Ω per inch
  - Total Dissolved Solids: < 100 ppm
  - Hardness: 6.3 - 8.8 grains per gallon
  - Maximum Salinity and Ion content:

Chlorides:	< 30 ppm
Sulfates:	< 40 ppm
Iron:	< 0.1 ppm
Copper:	< 0.05 ppm
Manganese:	< 0.05 ppm
- It is the responsibility of the purchaser to install and maintain the water supply to the appliance. Failure to provide satisfactory water quality in accordance with the operating manual requirements can cause damage to internal components and will VOID the warranty.
- All repair work is to be performed by an LBC authorized service agent.
- Equipment must be at the installation location of the original purchaser/user and shall not have been resold or reclaimed by another party.

Conditions (Continued):

- LBC equipment is for commercial use only. If sold as a component of another (OEM) manufacturer's equipment, or if used as a consumer product, such equipment is sold AS IS and without any warranty.
- Conditions of sale of the equipment shall have been met in full.
- The request for repair shall be made within the limited period of the warranty.

Failure to meet the above conditions will void this warranty.

Exclusions:

This warranty does not cover the following:

- Routine general maintenance, or periodic adjustment.
- Thermostat calibration after the first 30 days of use.
- Glass, Lamps, Gaskets, Oven Racks and other consumable parts.
- Air and gas burner adjustments.
- Fuse replacement.
- Cleaning and adjusting burners and pilot burners.
- Rack oven shutter adjustments.
- Repairs adjustments and corrections in the refrigeration portion of retarder/proofers resulting from the improper installation.
- Retightening of screws and fasteners.
- Failures caused by erratic or inadequate electrical, water, ventilation or gas service.
- Unauthorized repairs.
- Premature rusting, corrosion, or mineral build up caused by incoming water.
- Attached water treatment systems.
- Expedited freight on replacement parts other than standard ground shipments.
- Ordinary wear and tear.
- Use of the equipment for purposes other than those intended including non-commercial use such as residential or domestic.
- Appliances installed outside the contiguous U.S., including Alaska and Hawaii, and Canada.
- Incidental costs, charges, loss of business and damages as incurred by the user or others as a result of the use or failure of the equipment.
- Work and workmanship of the authorized service agent or others in the repair of the equipment.
- Other failures that are beyond the reasonable scope of this warranty.
- Damage caused during shipment is to be reported to the carrier, is not covered under this warranty, and is the sole responsibility of the purchaser/user.
- Natural disaster.

This warranty is exclusive and in lieu of all other warranties, expressed or implied, including expressed or implied warranties of merchantability or fitness for a particular purpose, each of which is hereby expressly disclaimed. The remedies described herein are exclusive and in no event shall LBC be liable for special, consequential or incidental damages for the breach or delay in the performance of this warranty